Technical Information

18.2005

New STIHL BT 121 earth auger – Series 4313

Contents

1. Technical description
2. Specifications
3. Service accessories and special tools
4. Repairs
5. Spare parts

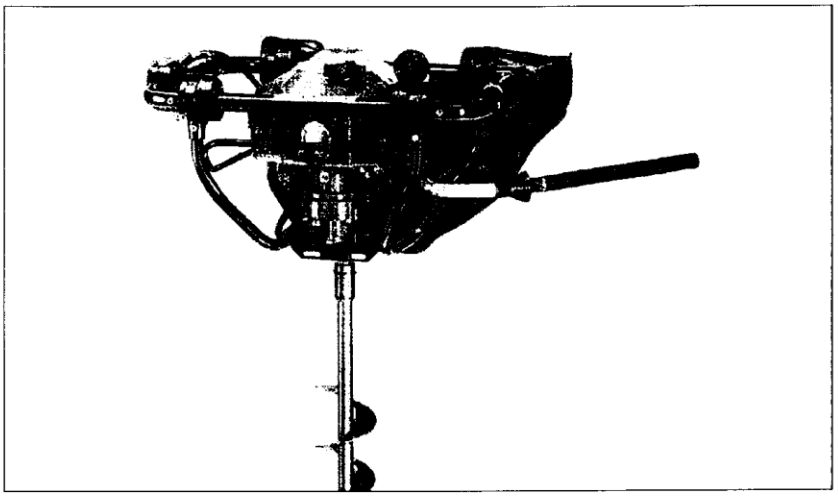

Drawing A Crankcase, Cylinder

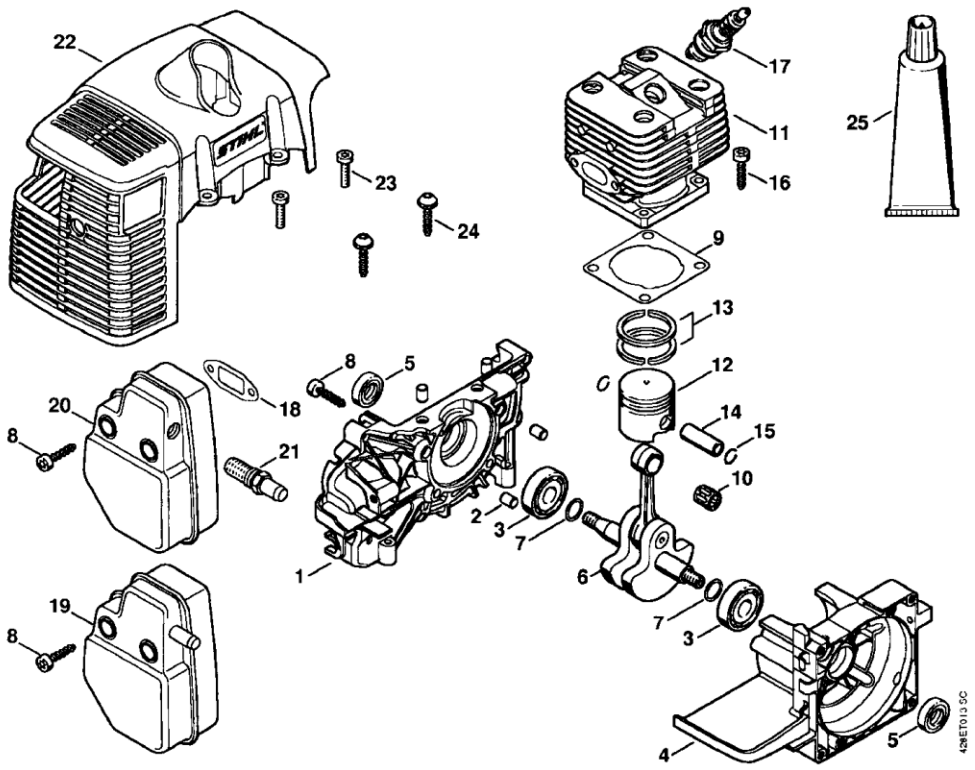

Drawing A Crankcase, Cylinder

Reference		Item number	Qty	Description
1		4134 020 2600	1	Crankcase
				□ 2, 3
2		0000 988 8600	4	Sleeve
3		9503 003 0242	2	Grooved ball bearing 6201
4		4134 020 2900	1	Crankcase
				□ 3
5		9640 003 1195	2	Oil seal 12x22x5
6		4134 030 0403	1	Crankshaft (25.2005)
				□ 7
7		4140 036 0300	2	Washer
8		9075 478 4159	7	Pan head self-tapping screw IS-D5x24
9		4134 029 2300	1	Cylinder gasket
10		9512 003 2250	1	Needle cage 10x13x12.5
11		4134 020 1213	1	Cylinder with piston Ø 35 mm
				□ 12 - 16
12		4134 030 2011	1	Piston Ø 35 mm
				□ 13 - 15
13		4119 034 3001	2	Piston ring Ø 35x1.5 mm
14		4119 034 1500	1	Piston pin 10x6.5x28
15		9463 650 1000	2	Snap ring 10
16		9075 478 4175	4	Pan head self-tapping screw IS-D5x28
17		0000 400 7000	1	Spark plug NGK BPMR7A
17		1110 400 7005	1	Spark plug Bosch WSR 6 F
18		4134 149 0600	1	Muffler gasket
19		4134 140 0603	1	Muffler (1)
20		4134 140 0607	1	Muffler (2)
				□ 21
21		4128 140 6900	1	Stub with screen
22		4134 084 0912	1	Shroud
23		9022 341 1019	2	Spline screw IS-M5x20
24	*	0000 951 1100	2	Screw IS-D5x20
25		0783 830 2000	1	Tube of sealant Dirko HT red (B)
		4134 007 1050	1	Set of gaskets
				□ 5, 9, 18

(1) BT 121, (2) BT 121-Z

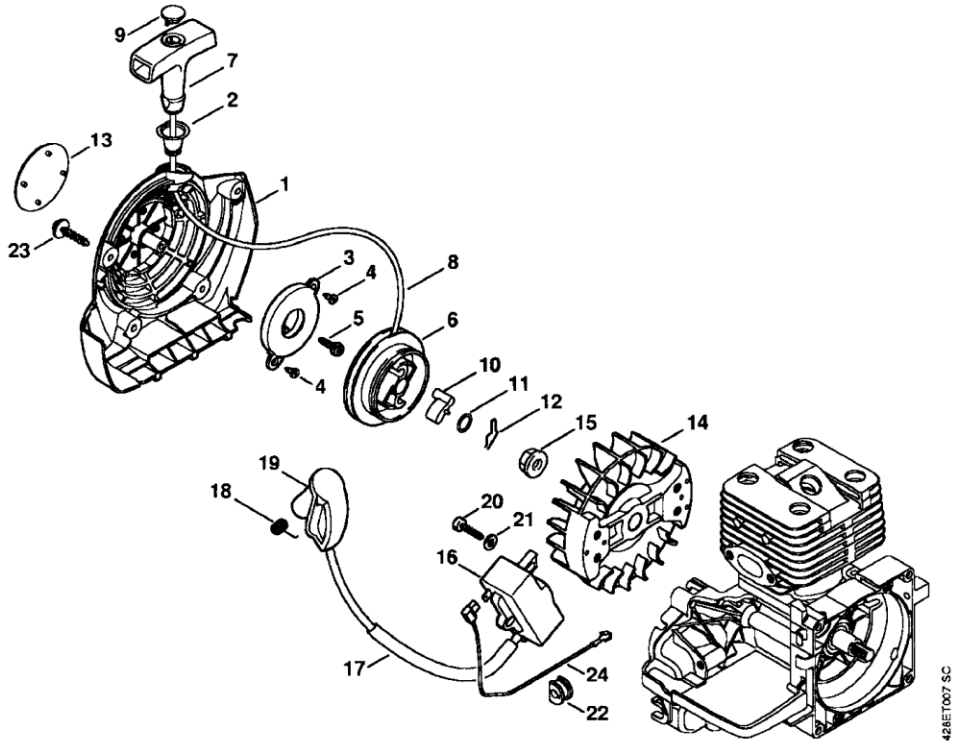
9
7
2
13
1
23
3
4
8
5
6
4
10
11
12
15
14
19
18
20
21
16
17
24
22
428ET007 SC

Drawing	B	Rewind starter, Ignition system	
Reference	Item number	Qty	Description
	4134 080 2101	1	Fan housing with rewind starter □ 1 - 11
1	4134 080 1801	1	Fan housing □ 2
2	1110 084 9102	1	Bushing
3	4134 190 0601	1	Rewind spring
4	9104 003 0410	2	Self-tapping screw P3x6
5	4223 084 5600	1	Screw
6	4128 195 0400	1	Rope rotor
7	0000 190 3405	1	Starter grip ElastoStart Ø 3 mm □ 8, 9
8	0000 195 8203	1	Starter rope Ø 3x850 mm
9	0000 195 7000	1	Cap
10	0000 195 7200	1	Pawl
11	0000 958 0923	1	Washer
12	1118 195 3500	1	Spring
13	4313 967 1503	1	Model plate BT 121
14	4134 400 1200	1	Flywheel (25.2005)
15	9220 260 1100	1	Hexagon nut M8
16	4134 400 1301	1	Ignition module □ 17 - 19
17	4137 442 0400	1	Insulating hose
18	0000 998 0604	1	Torsion spring
19	4128 405 1000	1	Spark plug boot
20	9075 478 3022	2	Pan head self-tapping screw IS-D4x20
21	9291 021 0121	2	Washer 5.3
22	4134 432 9300	1	Grommet
23	0000 951 1100	4	Screw IS-D5x20
24	4134 440 1101	1	Short circuit wire

(1) BT 121, (2) BT 121-Z

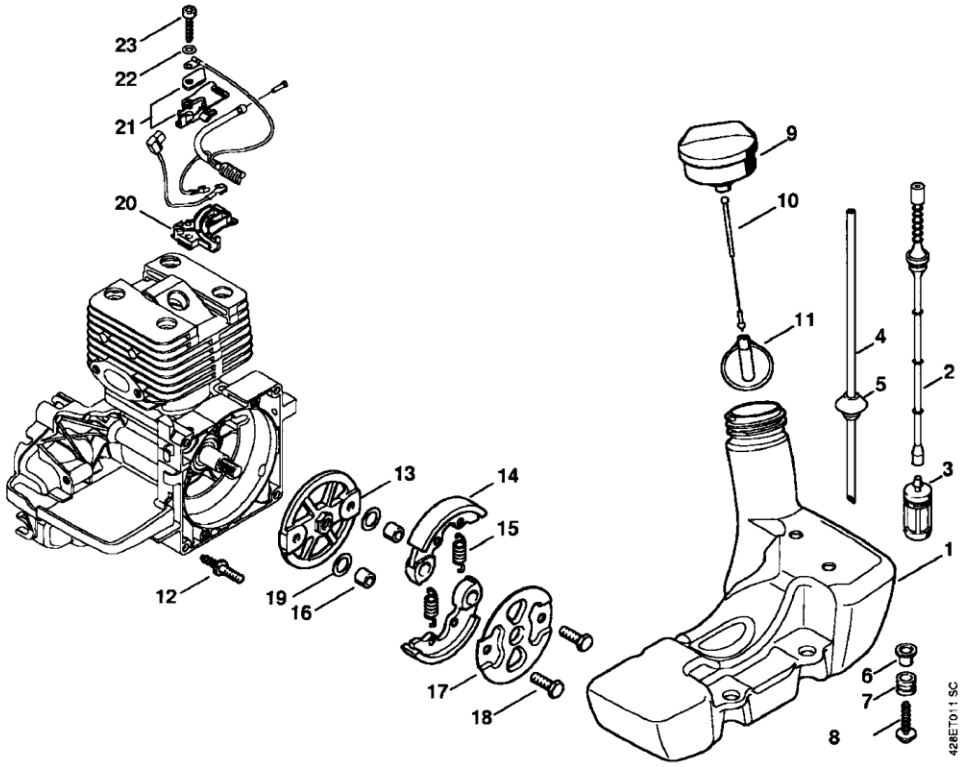
23
22
21
20
12
19
16
13
14
15
17
18
9
10
11
4
5
2
3
1
6
7
8
428ET011 SC

Drawing C Fuel tank, Clutch

Reference	Item number	Qty	Description
1	4134 350 0400	1	Fuel tank
			□ 2 - 7
2	4128 358 0800	1	Hose
3	0000 350 3506	1	Pickup body
4		1	Hose 2.2x5.4x205 mm (D)
	0000 930 2802	1	Hose 2.2x5.4 mm x 1 m (A,B)
5	0000 989 0516	1	Grommet
6	0000 351 3200	4	Sleeve
7	1125 084 8900	4	Grommet
8	0000 951 1102	4	Screw IS-D5x26
9	4128 350 0505	1	Filler cap
			□ 10, 11
10	0000 350 0900	1	Rope
11	0000 353 0800	1	Filler cap retainer
12	0000 711 8700	4	Collar screw
13	4128 160 2001	1	Clutch
			□ 14 - 19
14		2	Clutch shoe (D)
15	0000 997 5519	2	Tension spring
16	0000 961 0608	2	Ring
17	4128 162 1000	1	Cover washer
18	0000 951 0606	2	Hexagon head screw
19	0000 958 1000	2	Washer 16x10x0.5
20	4134 182 2104	1	Support, bottom
21	4134 180 6702	1	Support
22	9291 021 0120	1	Washer 5.3
23	9075 478 4159	1	Pan head self-tapping screw IS-D5x24

(1) BT 121, (2) BT 121-Z

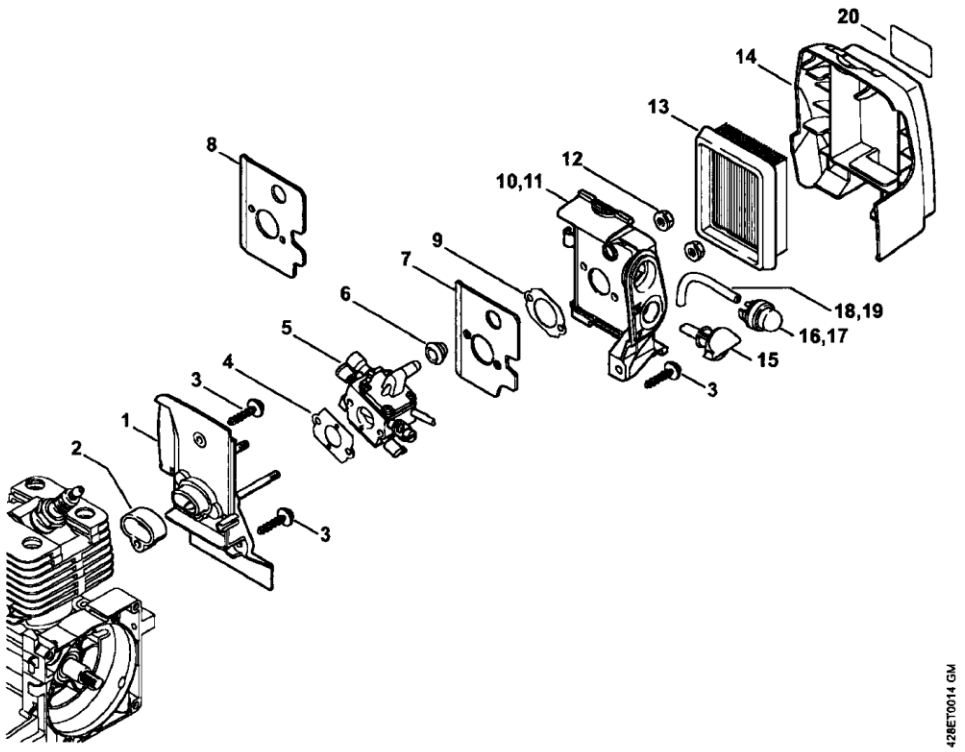
20
14
13
12
10,11
8
9
7
6
5
4
3
1
2
3
18,19
16,17
15
3
428ET0014 GM

Drawing D Carburetor housing, Air filter

Reference		Item number	Qty	Description
1		4134 120 0102	1	Carburetor housing
2		4134 129 3000	1	Sealing ring
3		0000 951 1100	4	Screw IS-D5x20
4		4128 129 0900	1	Gasket
5		4134 120 0652	1	Carburetor C1Q-S161
				□ 7
6		4134 123 7500	1	Grommet
7		4134 122 1801	1	Heat shield
8	*	4134 122 1800	1	Heat shield (16.2009)
9		4134 129 0900	1	Gasket
10		4134 140 2801	1	Filter housing
				□ 9
11	*	4134 140 2850	1	Filter housing (16.2009)
				□ 9, 10, 16, 18, 19
12		9220 260 0700	2	Hexagon nut M5
13		4134 141 0300	1	Air filter
14		4134 141 0500	1	Filter cover
15		4128 182 9500	1	Choke knob
16		0000 350 6201	1	Fuel pump
17	*	4130 350 6200	1	Fuel pump (16.2009)
18			1	Hose 2.2x5.4x65 mm (D)
19	*		1	Hose 2.2x5.4x68 mm (D) (16.2009)
		0000 930 2802	1	Hose 2.2x5.4 mm x 1 m (A,B)
20		0000 967 3693	1	Warning pictogram Filler cap (2) USA
		4134 007 1050	1	Set of gaskets
				□ 4

(1) BT 121, (2) BT 121-Z

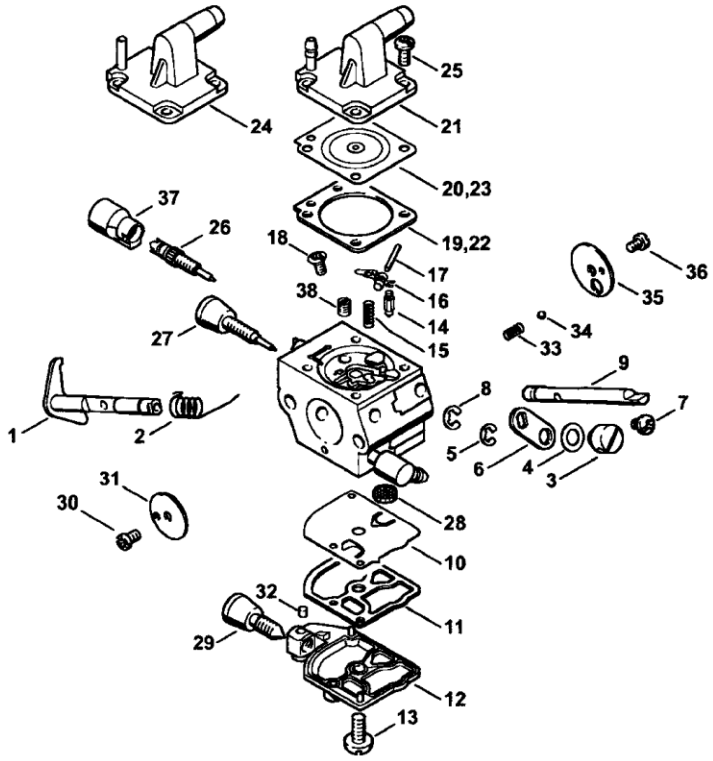
25
24
21
20,23
37
26
18
19,22
17
36
16
35
38
14
34
27
15
33
9
8
7
1
2
5
6
4
3
31
30
28
10
32
11
29
12
13
275ET008 GM

Reference		Item number	Qty	Description
		4134 120 0652	1	Carburetor C1Q-S161 □ 1 - 21, 25 - 38
	*	4134 120 0603	1	Carburetor C1Q-S82 (C) (16.2009) □ 1 - 18, 22 - 38
1		4134 120 7101	1	Throttle shaft with lever
2		1123 122 3000	1	Spring
3		4128 121 8901	1	Pin
4		4137 121 8600	1	Washer
5		1120 122 9000	1	E-clip
6		4134 123 7300	1	Lever
7		9079 319 0280	1	Flat head screw M3x3.5
8		1120 122 9000	1	E-clip
9		4134 121 3000	1	Choke shaft
10		1129 121 4800	1	Pump diaphragm
11		1123 129 0905	1	Gasket
12		4134 121 0802	1	End cover
13		1120 122 7800	1	Oval head screw
14		4116 121 5100	1	Inlet needle
15		1123 122 3001	1	Spring
16		1125 121 5000	1	Inlet control lever
17		1120 121 9200	1	Spindle
18		1120 122 6600	1	Collar screw
19		4134 129 0901	1	Gasket
20		4134 121 4700	1	Metering diaphragm
21		4134 121 0803	1	End cover
22	*	1129 129 0900	1	Gasket (16.2009)
23	*	4129 121 4700	1	Metering diaphragm (16.2009)
24	*	4134 121 0801	1	End cover (16.2009)
25		1120 122 6601	4	Collar screw
26		4134 122 6701	1	High speed adjustment screw
27		4134 122 6801	1	Low speed adjustment screw
28		1123 121 7800	1	Strainer
29		4180 122 6200	1	Idle speed adjustment screw
30		1120 122 7400	1	Round head screw
(1) 31		121, 4134 121 3302	1	Throttle shutter

Drawing E Carburetor C1Q-S161, C1Q-S82

Reference		Item number	Qty	Description
32		1125 122 4200	1	Ball
33		4119 122 3002	1	Spring
34		4119 122 4200	1	Ball
35		4128 121 2900	1	Choke shutter
36		1125 122 7403	1	Round head screw
37		4229 121 2701	1	Cap
38		1132 121 5640	1	Fixed jet 0.40
		4128 007 1060	1	Set of carburetor parts □ 10, 11, 19, 20
	*	1129 007 1062	1	Set of carburetor parts (16.2009) □ 10, 11, 22, 23

(1) BT 121, (2) BT 121-Z

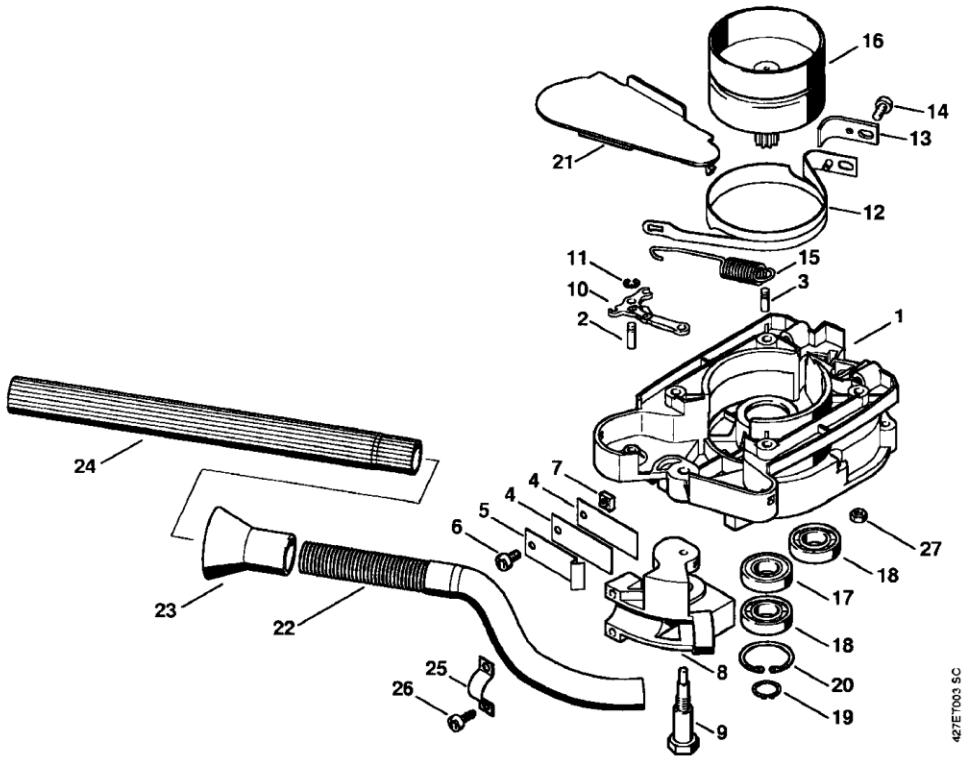
16
14
13
21
12
11
15
10
3
2
1
24
7
4
4
5
6
27
18
17
18
23
22
8
20
25
26
19
9
427ET003 SC

Drawing F Clutch housing, Brake

Reference	Item number	Qty	Description
1	4313 160 0650	1	Clutch housing □ 2, 3
2	1121 162 5200	1	Pin
3	1120 162 5200	1	Pin
4	4311 162 7805	2	Flat spring
5	4311 162 7800	1	Flat spring
6	9022 341 0950	1	Spline screw IS-M5x10
7	9222 068 0700	1	Square nut M5
8	4311 162 3000	1	Retainer
9	4311 162 2200	1	Bearing pin
10	1121 160 5000	1	Lever
11	9460 624 0400	1	E-clip 4
12	4313 160 5401	1	Brake band
13	4313 161 9500	1	Insert
14	9022 341 0960	1	Spline screw IS-M5x12
15	4311 162 7900	1	Tension spring
16	4313 160 2900	1	Clutch drum
17	9503 003 5260	1	Grooved ball bearing 6002-2Z
18	9503 003 0310	2	Grooved ball bearing 6002
19	9455 621 1300	1	Circlip 13x1
20	9456 621 3600	1	Circlip 32x1.2
21	4313 161 1100	1	Cover
	4311 160 4800	1	Auger brake lever □ 22 - 24
22		1	Tube (D)
23		1	Sleeve (D)
24		1	Tube with hose (D)
25	4311 162 2300	1	Clamp
26	9074 477 4130	2	Pan head self-tapping screw IS-P5x16
27	9216 263 0700	4	Hexagon nut M5

(1) BT 121, (2) BT 121-Z

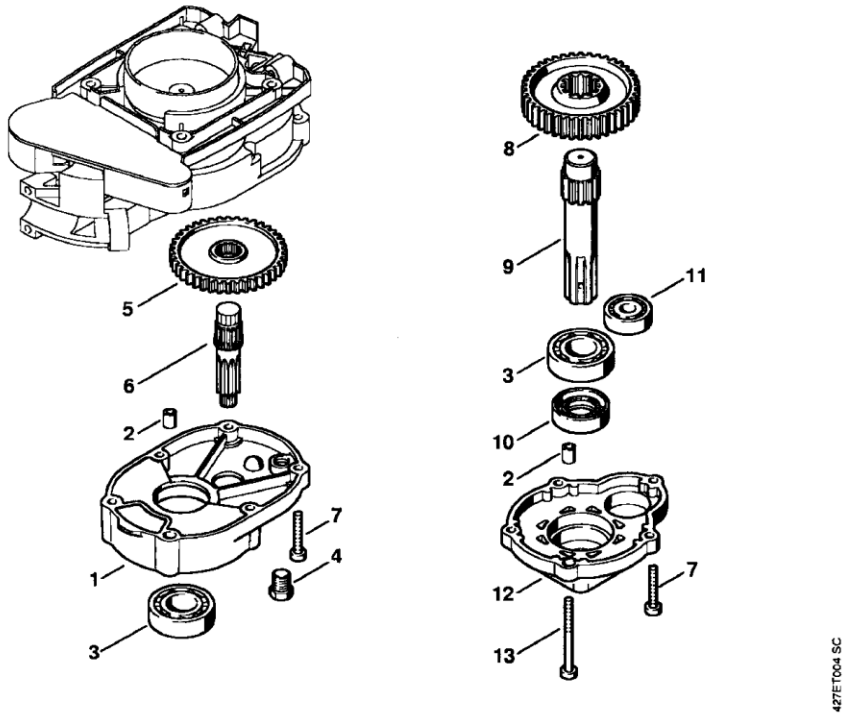
5
6
2
1
3
7
4
8
9
11
3
10
2
12
7
13
427ET004 SC

Drawing G Gear head

Reference	Item number	Qty	Description
1	4313 641 0300	1	Gear housing
2	4600 641 4900	2	Sleeve
3	9503 003 0510	2	Grooved ball bearing 6004
4	4119 713 6500	1	Screw plug
5	4313 642 0100	1	Spur gear
6	4313 642 2500	1	Drive pinion shaft
7	9022 341 1070	3	Spline screw IS-M5x30
8	4313 642 0105	1	Spur gear
9	4313 642 0600	1	Drive shaft
10	9630 003 3616	1	Oil seal 35x20x7
11	9503 003 6320	1	Grooved ball bearing 6200
12	4311 641 0400	1	Cover
13	9022 341 1110	4	Spline screw IS-M5x52

(1) BT 121, (2) BT 121-Z

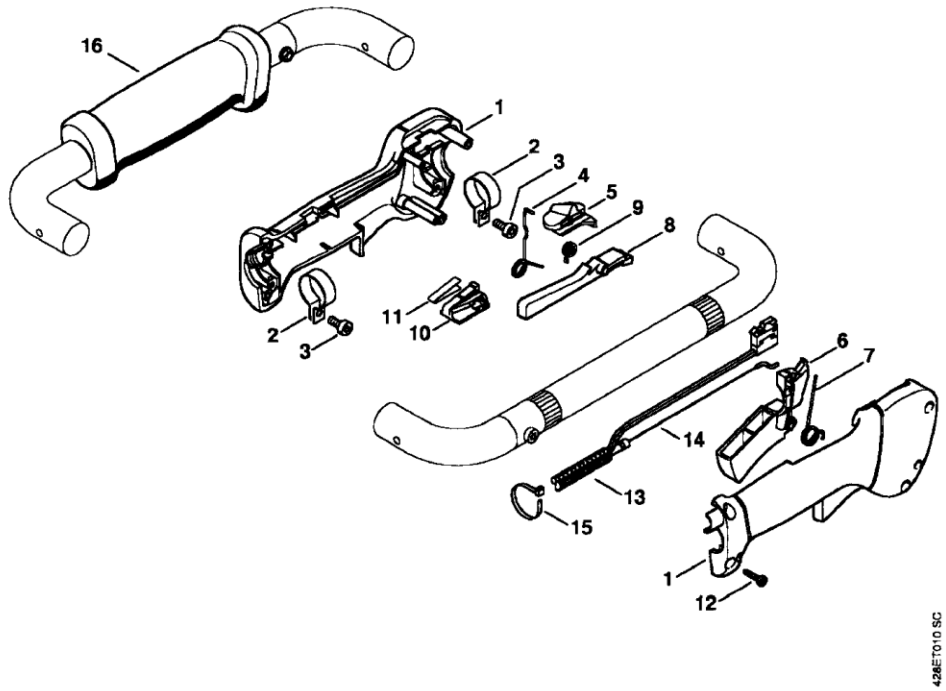
16
1
2
3
4
5
9
8
11
10
2
3
6
7
14
13
15
1
12
428ET010 SC

Drawing	H	Control handle	
Reference	Item number	Qty	Description
	4137 790 1307	1	Control handle
			□ 1 - 12
1	4137 790 0300	1	Handle
2	4137 791 9400	2	Hose clamp
3	9022 341 0960	2	Spline screw IS-M5x12
4	4137 182 4505	1	Torsion spring
5	4137 182 1701	1	Slide control
6	4137 182 1001	1	Throttle trigger
7	4137 182 4504	1	Torsion spring
8	4137 182 0802	1	Trigger interlock
9	4128 182 4501	1	Torsion spring
10	4128 793 3000	1	Slide
11	4128 791 3100	1	Spring
12	9074 478 3025	4	Pan head self-tapping screw IS-P4x16
13	4313 180 1102	1	Throttle cable
			□ 14
14	4313 182 3200	1	Throttle cable
15	0751 010 7056	2	Cable tie
16	4313 791 0300	1	Handle, left

(1) BT 121, (2) BT 121-Z

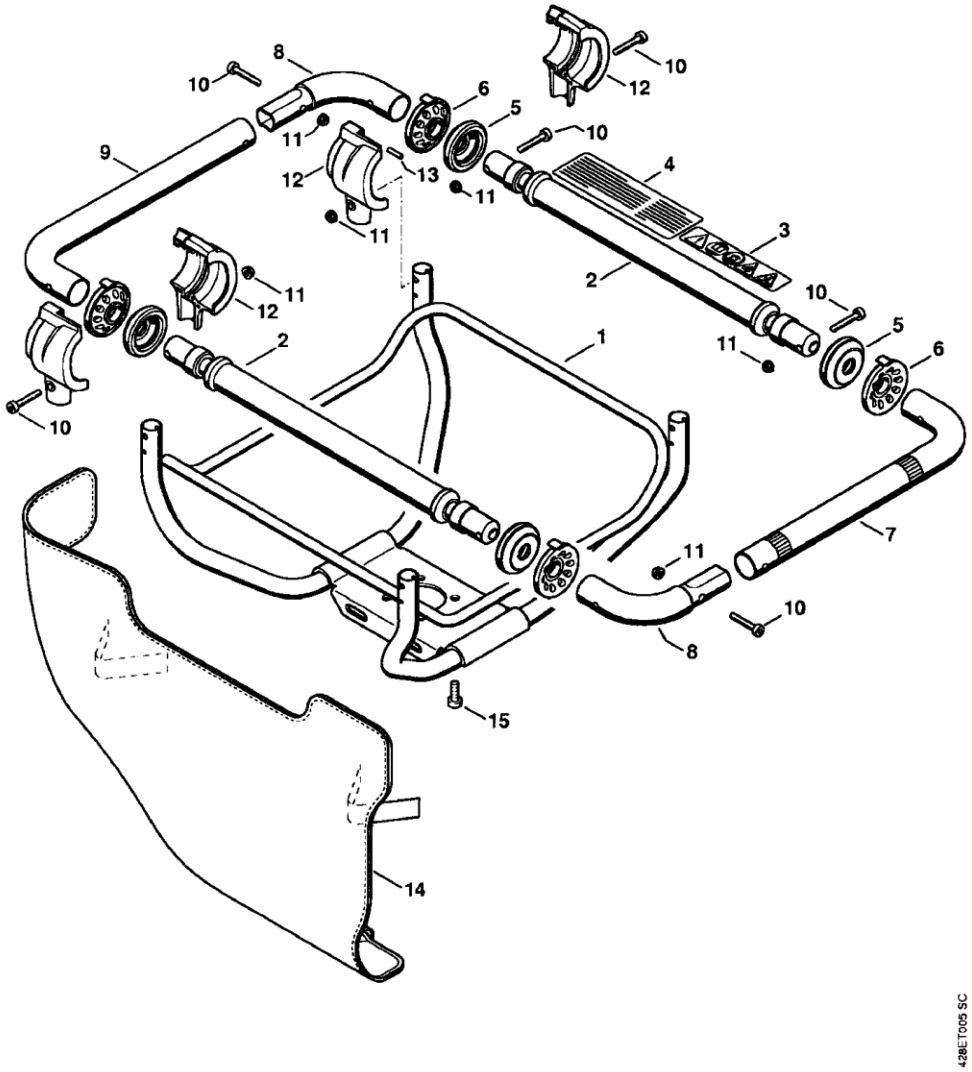
1
2
3
4
5
6
7
8
9
10
11
12
13
14
15
428ET005 SC

Drawing J Handlebar

Reference	Item number	Qty	Description
1	4313 790 5600	1	Handle frame
2	4313 790 2901	2	Tube
			□ 3
3	0000 967 3703	1	Warning pictogram BT
4	4311 967 3500	1	Instruction label (2) USA
5	4313 792 9400	4	Limit stop
6	4313 792 9300	4	Rubber buffer
7	4313 791 1703	1	Handlebar
8	4313 791 5500	2	Elbow connector
9	4313 791 1702	1	Handlebar
10	9022 341 1070	10	Spline screw IS-M5x30
11	9216 263 0700	10	Hexagon nut M5
12	4313 790 0901	4	AV housing
			□ 13
13	9371 470 2168	1	Cylindrical pin 4h8x25
14	4313 748 2500	1	Hip pad
15	9022 341 1310	4	Spline screw IS-M6x18

(1) BT 121, (2) BT 121-Z

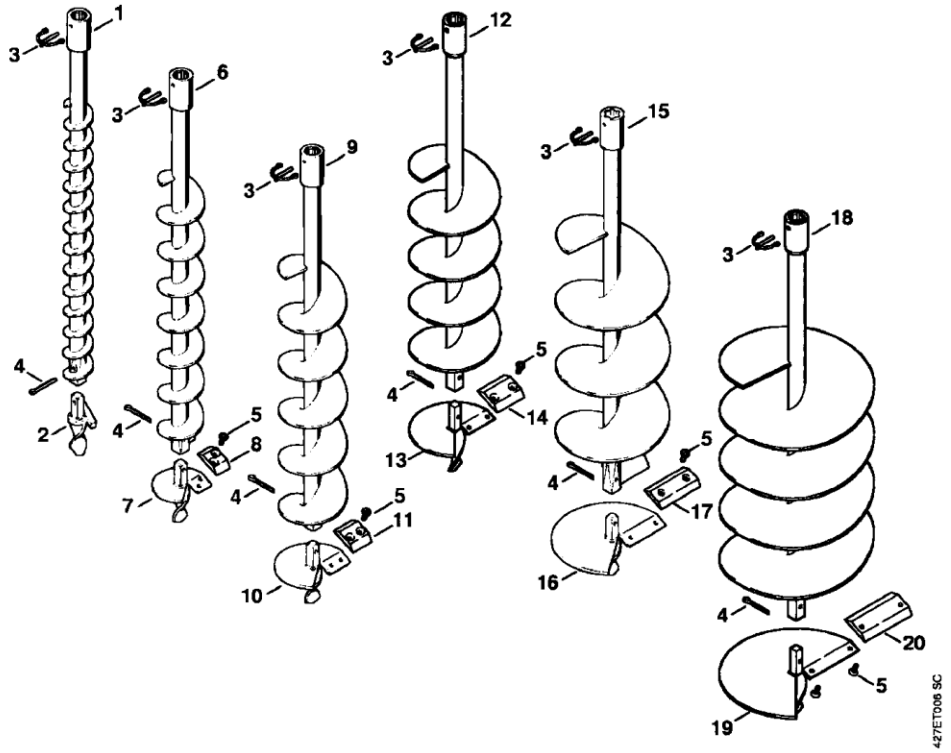
1
3
6
9
12
15
18
4
2
5
8
7
11
10
13
14
16
17
20
19
427ET006 SC

Drawing	K		Earth auger
Reference	Item number	Qty	Description
1	4404 680 2004	1	Earth auger Ø 40 mm / 1 5/8"
			□ 2 - 4
2	4404 680 3050	1	Drill head
3	4311 682 3500	1	Retaining pin
4	9395 021 2360	1	Split pin 4.5x40
5	9062 319 1260	2	Countersunk screw M6x12
6	4404 680 2006	1	Earth auger Ø 60 mm / 2 3/8"
			□ 3 - 5, 7, 8
7	4404 680 3051	1	Drill head
			□ 5, 8
8	4404 682 3101	1	Blade
9	4404 680 2009	1	Earth auger Ø 90 mm / 3 1/2"
			□ 3 - 5, 10, 11
10	4404 680 3052	1	Drill head
			□ 5, 11
11	4404 682 3102	1	Blade
12	4404 680 2012	1	Earth auger Ø 120 mm / 4 3/4"
			□ 3 - 5, 13, 14
13	4404 680 3053	1	Drill head
			□ 5, 14
14	4404 682 3103	1	Blade
15	4404 680 2015	1	Earth auger Ø 150 mm / 5 15/16"
			□ 3 - 5, 16, 17
16	4404 680 3054	1	Drill head
			□ 5, 17
17	4404 682 3104	1	Blade
18	4404 680 2020	1	Earth auger Ø 200 mm / 7 13/16"
			□ 3 - 5, 19, 20
19	4404 680 3055	1	Drill head
			□ 5, 20
20	4404 682 3105	1	Blade

(1) BT 121, (2) BT 121-Z

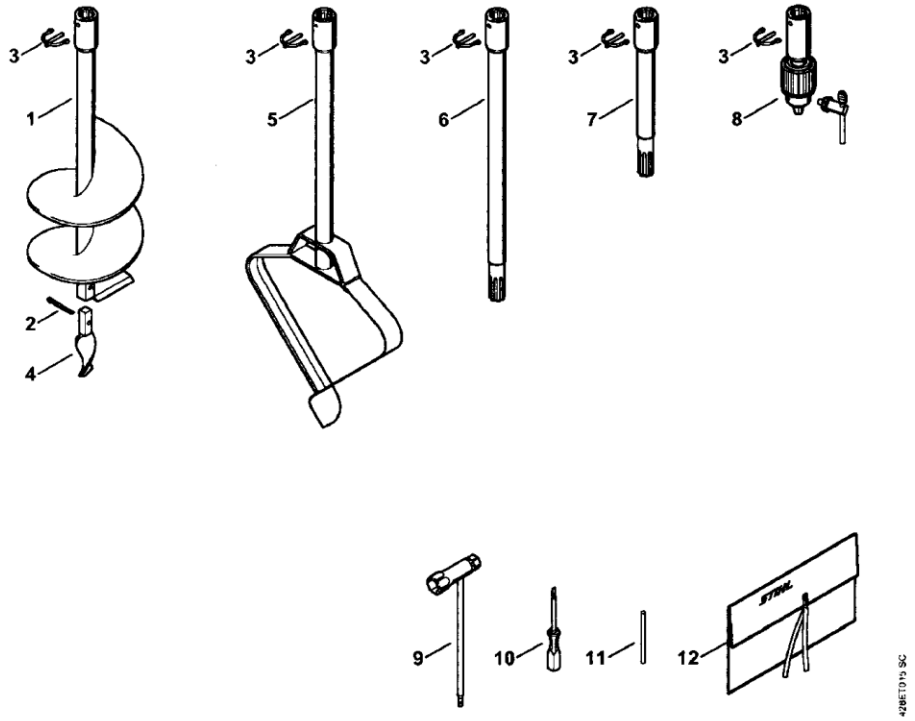
3
1
2
4
3
5
3
6
3
7
3
8
9
10
11
12
STIHL
420ET019 SC

Drawing	L	Augers, Tools, Extras	
Reference	Item number	Qty	Description
1	4311 680 2515	1	Planting auger Ø 150 mm / 5.9" □ 2 - 4
2	9395 021 2360	1	Split pin 4.5x40
3	4311 682 3500	1	Retaining pin
4	4311 680 3305	1	Pilot bit
5	4404 680 1900	1	Planting hole drill Ø 260 mm / 10.2" □ 3
6	4311 680 2350	1	Shank extension 450 mm / 18" □ 3
7	4313 680 2300	1	Shank extension 250 mm / 10" □ 3
8	4311 680 4010	1	Chuck □ 3
9	4128 890 3400	1	Combination wrench
10	0000 890 2300	1	Screwdriver
10	0000 890 2305	1	Screwdriver available in Brazil only
11	4130 893 7800	1	Locking pin
12	0000 891 0801	1	Tool roll (B)

(1) BT 121, (2) BT 121-Z